BESTWARE HARDWARE PRODUCTION CO., LTD.

Add. Block 8, No. 6, Jianda Nan Road, Jiangmen, Guangdong, China

T. 0086-750-3108801

Eml. andyhuang@bestware.net.cn

w w w . b e s t w a r e . n e t . c n



COMMERCIAL

PLUMBING AND CATERING

w w w . b e s t w a r e . n e t . c n

OUR SELECTION OF TOP BRANDS

LOCTITE ENGINEERING ADHESIVES · NEOPERL · Brugarolas · sedal THE FAUCET'S HEART

WRAS APPROVED PRODUCT · UPC · NSF/ANSI 61 · LEAD FREE

SGS · WaterMark · Europäisches Patentamt European Patent Office Office européen des brevets

ABOUT

ONE-STOP SOLUTION FOR COMMERCIAL SERVICE

Bestware Hardware Production Co., Ltd. is an enterprise integrating research, design, development, production, sale, service and combining domestic & foreign trade. We dedicated to produce highquality products to reach those consumers willing to express their concept among the highest level products available on the market.

Our Company commenced business in 2003 in commercial catering category on manufacturing of fry baskets and wire shelves which named BaiLing. With the company's diversified development, in 2007, Bestware was formed, which extending our product range to stainless steel plumbing & related commercial accessories.

Our company is filled with passion for quality, functionality and innovation. We are flexible to fulfill customer's requirements with a deep understanding of what the customers need and will come to need.Therefore, we win support and trust from the people who buy our offerings and look at the total value over the entire lifecycle.

Innovation is a fundamental part of our company. We are sure that is constantly moving forward to assist our customers and contribute to improve our earth.





HISTORY



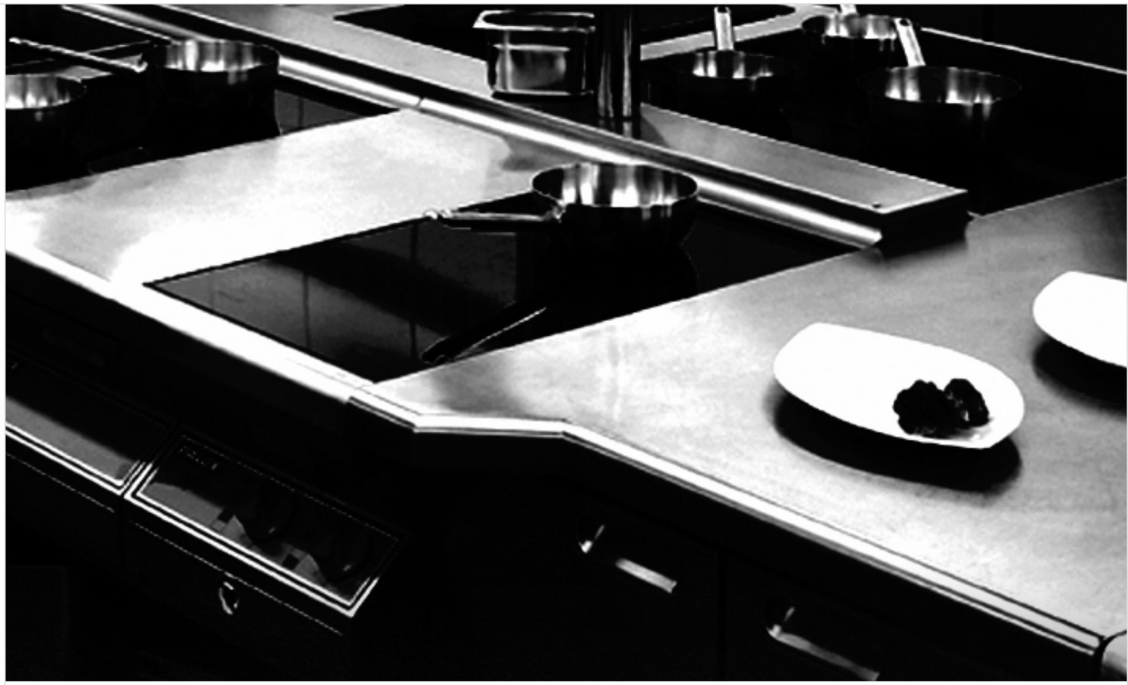

2003 **BaiLing commenced business.**

2007 **Bestware was formed in June 2007**
started to cooperate with some group brands in USA.

2012 **Set up the office**
with sales team in December 2012.

2015 **Moved up for a bigger office**
in November 2015 and continued growth.

2016 **Moved to new premises**
acquiring 2000 square meters of office, test workshop and warehouse space in November 2016.

2019 **Install automatic assembly-inspection line**

2023 **Grand opening of our new factory, Bisource**

BESTWARE

Manufacturer of stainless steel commercial faucets

The combination of outstanding design and high hygienic materials used, resulting in a range of taps to suit various requirements in various industries.

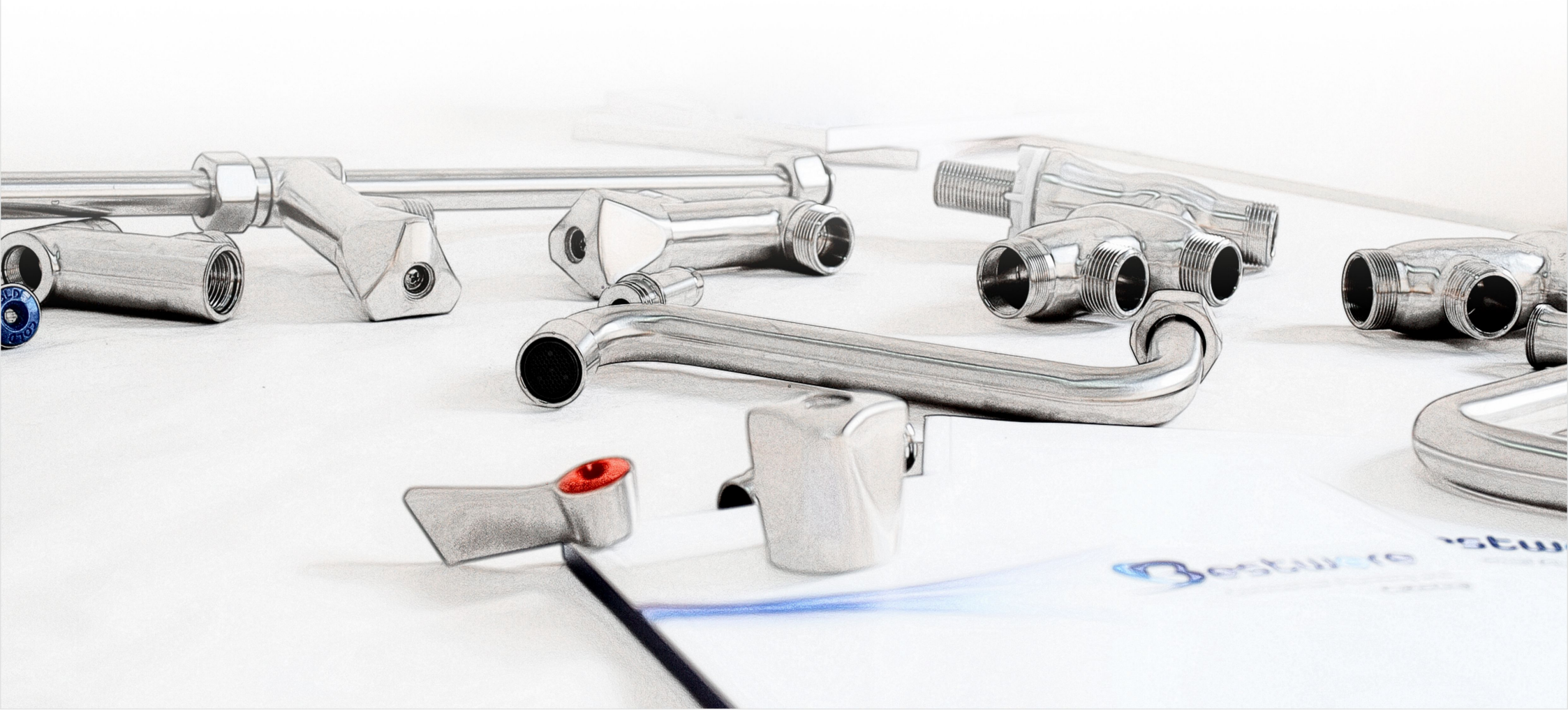

CONTENTS

PUBLIC FAUCET AND BASIN SET
01
Drinking Bubblers
Drinking Fountain
Washtrough and Basin

SMART SENSOR FAUCET
15
Deck Mounted Sensor Faucet
Wall Mounted Sensor Faucet

PATENTED SPRAY VALVE
21

PRE RINSE FAUCET
27
Professional Contemporary Style
Premium Typical Style
Economy Affordable Style
Blooming Sleek Style

SINK MIXER FAUCET
61

COMMERCIAL CATERING
69
Fryer Basket
Pasta Basket
Wire Rack
Kitchen Accessories



PUBLIC FAUCET AND BASIN SET

Reliability in public areas - airports / train stations / buildings / schools / kitchens and more



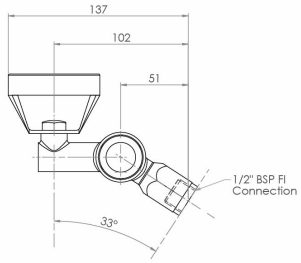

BUBS-PB

Drinking Bubbler Tap - Push Button

Material: Stainless Steel 304

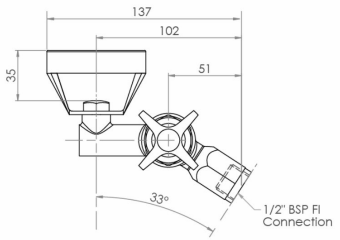



BUBS-CH

Drinking Bubbler Tap - Vandal Resistant Cross Handle

Material: Stainless Steel 304



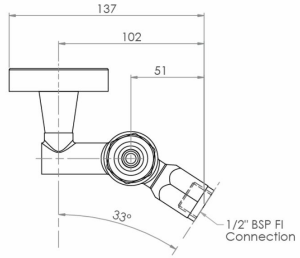

BUBS-LH

Drinking Bubbler Tap - Lever Handle

Material: Stainless Steel 304



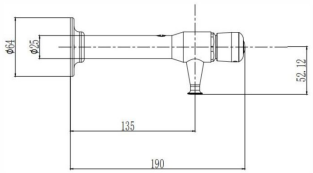

BLTFL-PB

W/M Bottle Filler - Push Button

Material: Stainless Steel 304

* Can be adjusted to a drinking bubbler



With its two different functions, the Bestware Stainless Steel Interchangeable Drinking Bubbler Tap is an **innovation**, **uniqueness** and **inspiration** for drinking fountains. It comes in two different options - either drinking bubbler tap or bottle filler.



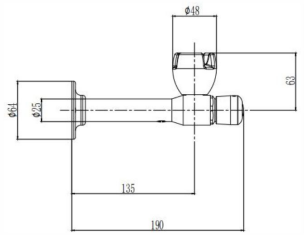

BUBL-PB

Drinking Bubbler Tap - Push Button

Material: Stainless Steel 304

* Can be adjusted to a bottle filler



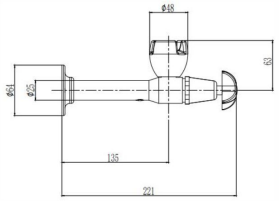

BUBL-CH

Drinking Bubbler Tap - Vandal Resistant Cross Handle

Material: Stainless Steel 304

* Can be adjusted to a bottle filler

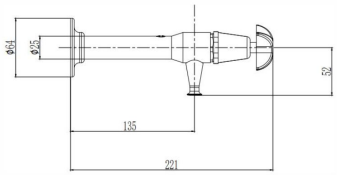



BLTFL-CH

W/M Bottle Filler - Vandal Resistant Cross Handle

Material: Stainless Steel 304

* Can be adjusted to a drinking bubbler



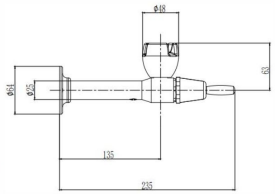

BUBL-LH

Drinking Bubbler Tap - Lever Handle

Material: Stainless Steel 304

* Can be adjusted to a bottle filler

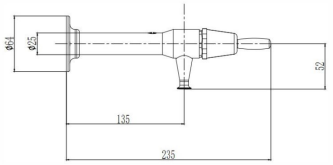



BLTFL-LH

W/M Bottle Filler - Lever Handle

Material: Stainless Steel 304

* Can be adjusted to a drinking bubbler



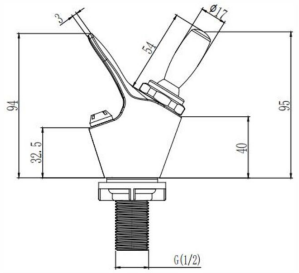

BUBMI-LH

Mini Drinking Bubbler Tap - Lever Handle

Material: Stainless Steel 304

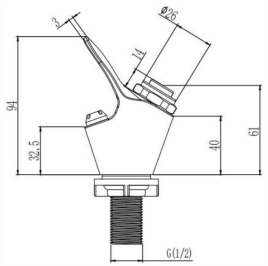



BUBMI-PB

Mini Drinking Bubbler Tap - Push Button

Material: Stainless Steel 304

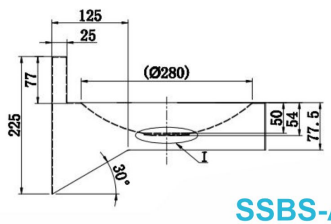



SSBS-A

Stainless Steel Basin (Tap Excluded)

Material: Stainless Steel 304



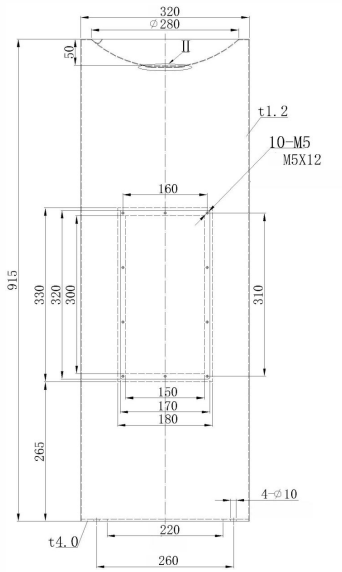

SSBS-C

Freestanding Stainless Steel Basin (Tap Excluded)

Material: Stainless Steel 304

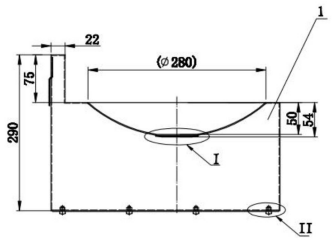



SSBS-B

Stainless Steel Basin (Tap Excluded)

Material: Stainless Steel 304



SBLTFB/SBLTFM

Stainless Steel Sensor Glass/Bottle Filler Tap

Material: Stainless Steel 304

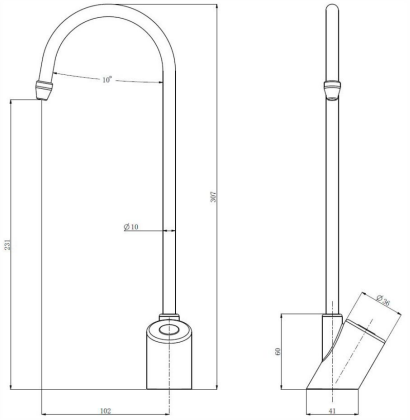

ABUBAB/ABUBAM

Stainless Steel Sensor Drinking Bubbler

Material: Stainless Steel 304

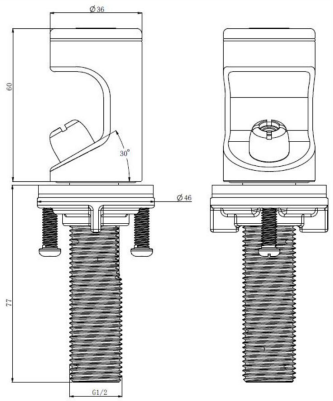





BLTFLT1

Stainless Steel Manual Glass/Bottle Filler Tap

Material: Stainless Steel 304

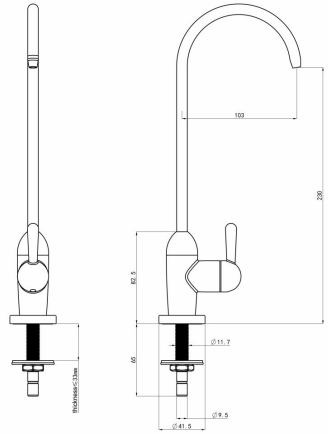

SSBS-D

Stainless Steel Basin (Tap Excluded)

Material: Stainless Steel 304

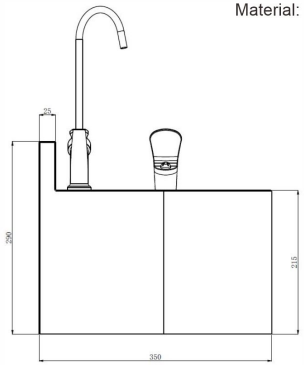



FONT 30

Drinking Fountain with Splash Back (Tap Excluded)

Material: Stainless Steel 304

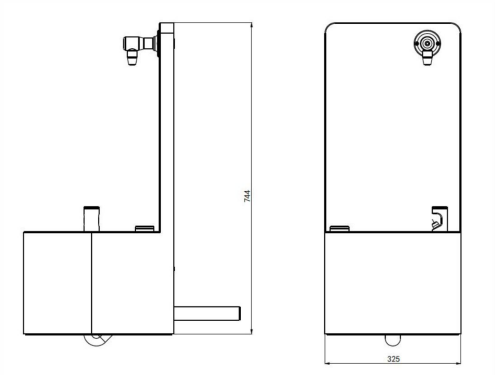



SBLTFLB/SBLTFLM
SLBLTFLB/SLBLTFLM

Wall-Mount Bottle Filler with Hob-Mount Sensor

Material: Stainless Steel 304

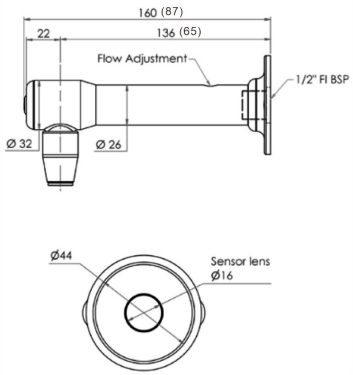





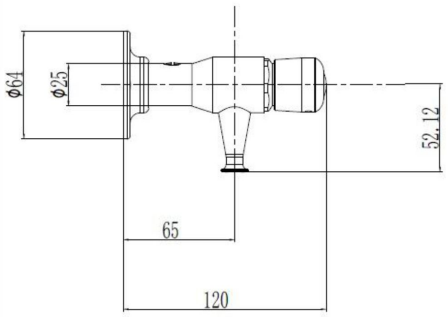

BLTFLM-PB

Mini Push Button Bottle Filler

Material: Stainless Steel 304



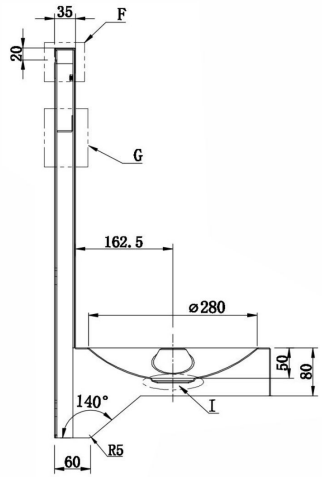

F20

Drinking Fountain with Splash Back (Tap Excluded)

Material: Stainless Steel 304



WT240

Stainless Steel W/M Washtrough

Material: Stainless Steel 304

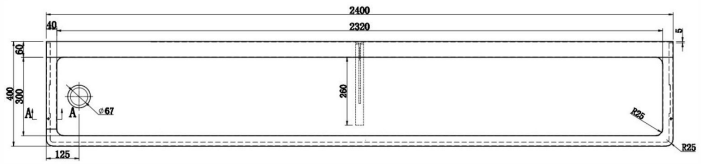

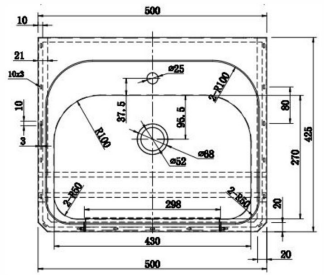



SSKNBS-A

Hands Free Knee Operated Basin

Material: Stainless Steel 304



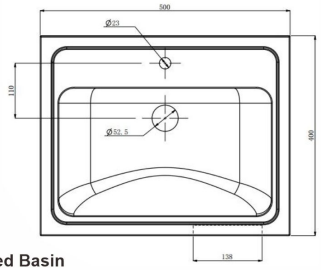

SSKNBS

Hands Free Knee Operated Basin

Material: Stainless Steel 304









SSKNV-A

Push Button Knee Operated Valve

Material: Stainless Steel 304

SSKNV-B

Push Button Knee Operated Valve(Thermostatic Mixing)

Material: Stainless Steel 304

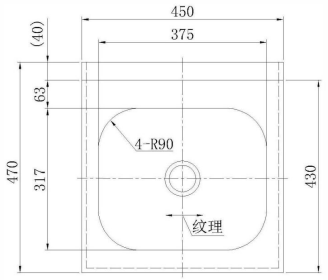

FSS454732

Stainless Steel Basin Sink

Material: Stainless Steel 304







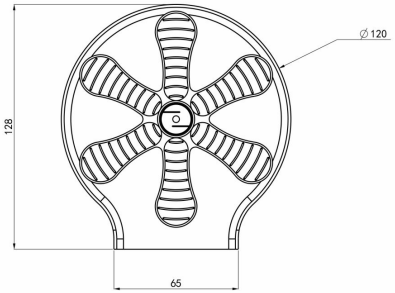

CR120

Compact Jug and Glass Rinse

Material: Stainless Steel 304

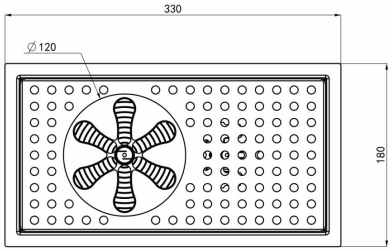



TR325

Stainless Steel Rinser with Drain Tray

Material: Stainless Steel 304



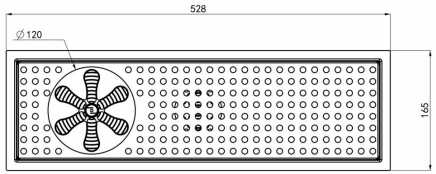

TR523

Stainless Steel Rinser with Drain Tray

Material: Stainless Steel 304

SMART SENSOR TAP

Stainless Steel 304

Smart Sensor Tap

With hands-free convenience.
Sensor Tap is equipped in accordance with up-to-date tendencies of compressed timetable.



HMSTB / HMSTM

Distinct laconic shape and line

Control box set with plug power & battery

Automatic turn on & turn off for water conserving

Over 300,000 use times for solenoid valve

Flexible compliant with other components to reach hot & cold

THMSTSB

Sensor Faucet with Temperature Control Lever

Material: Stainless Steel 304 (Satin Finish)

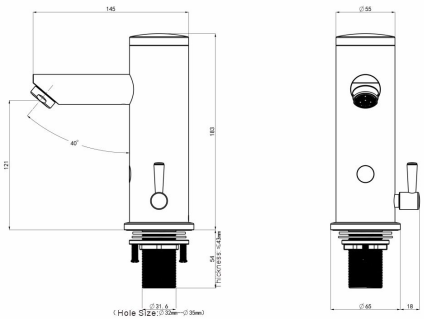





THMSTCB

Sensor Faucet with Temperature Control Lever

Material: Stainless Steel 304 (Chrome Plated)

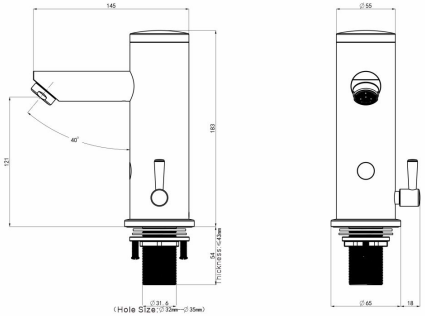

DHMSTM

Sensor Faucet with Digital Temperature Control

Material: Stainless Steel 304



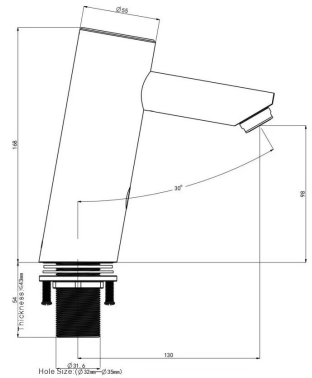

2DHMSTM

2 IN 1 (Soap Dispenser and Hand Washing) Multifunctional Faucet

Material: Zinc Alloy

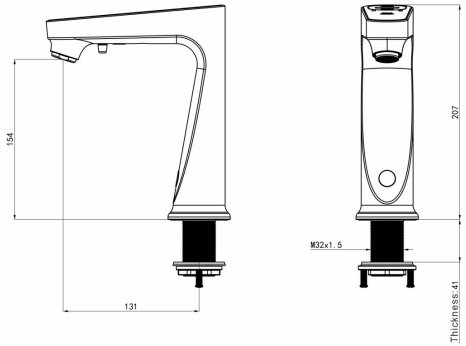



ST210B / ST210M / ST260B
ST260M / ST310B / ST310M

Gooseneck Hob Mount Sensor Faucet

Material: Stainless Steel 304



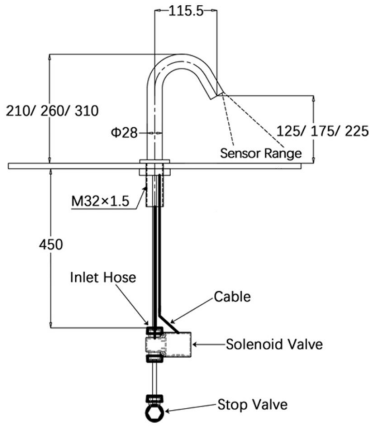

WST200P

Concealed Wall Mount Sensor Faucet with Thermostat

Material: Stainless Steel 304



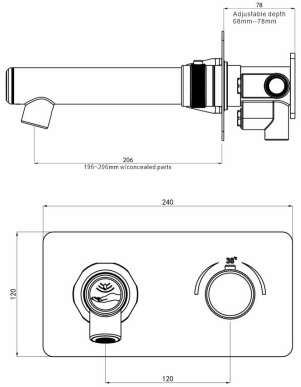

ST210BD / ST260BD / ST310BD
ST210MD / ST260MD / ST310MD

Gooseneck Hob Mount Dual Sensor Faucet

Material: Stainless Steel 304

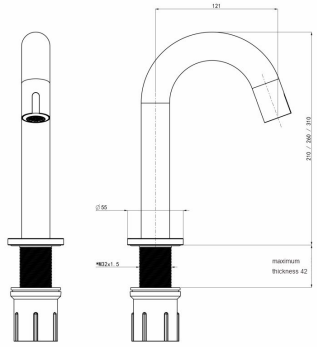



WST18B

Wall Mounted Stainless Steel Sensor Faucet

Material: Stainless Steel 304

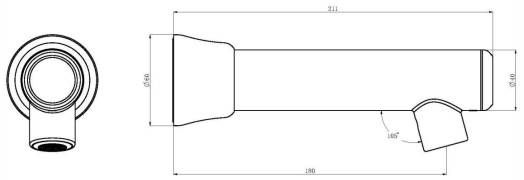



ELEGANT

Stainless Steel Variable Spray

Model No.: **BWSG-SSE**



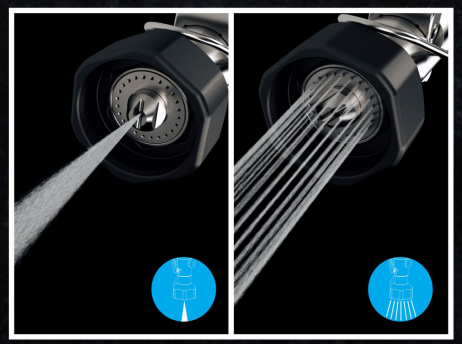

Jet Sprayer **4.8L/min(1.26GPM)**

Shower Sprayer **9L/min(2.38GPM)**

DETAILS MATTER



AESTHETICALLY DESIGNED X PERFORMANCE DRIVEN

ELEGANT series

LIFETIME WARRANTY

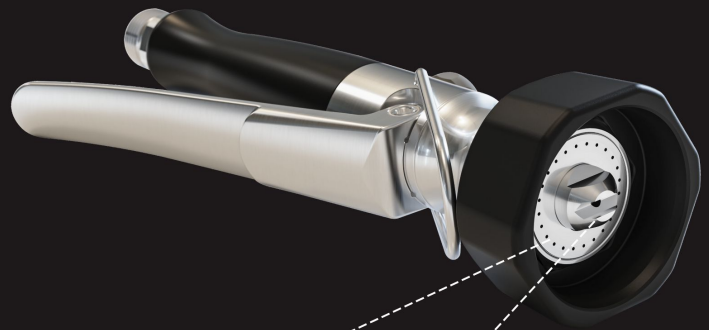

Cyclone Pattern

Tight, high-powered shower pattern for tough grime removal

Knife Pattern

Wide, fan-like pattern for large surface area rinsing



DESIGN

MECHANICAL

Stainless Steel Variable Spray

Model No.: **BWSG-SSA**

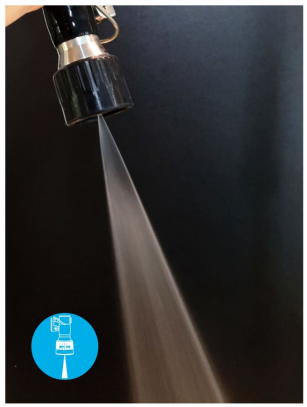

Jet Sprayer

3.8L/min(1.00GPM)

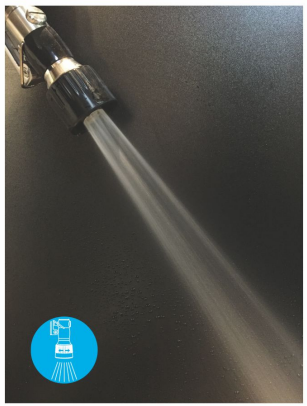

Shower Sprayer

3.4L/min(0.90GPM)



Handy
Utility
Economic

Model No.: **BWSG-SSJ**



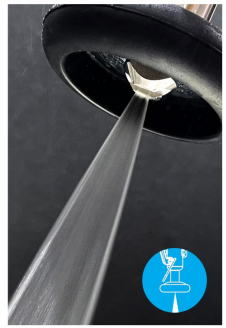

Shower Sprayer

5L/min(1.32GPM)

THE HEAVY DUTY
PRE-RINSE HOSE

Can stand temperature from -50°C to 95°C
Non-leaking under 35 KGS static water pressure
100,000 times of bend and rotating lifespan
150KGS pulling force

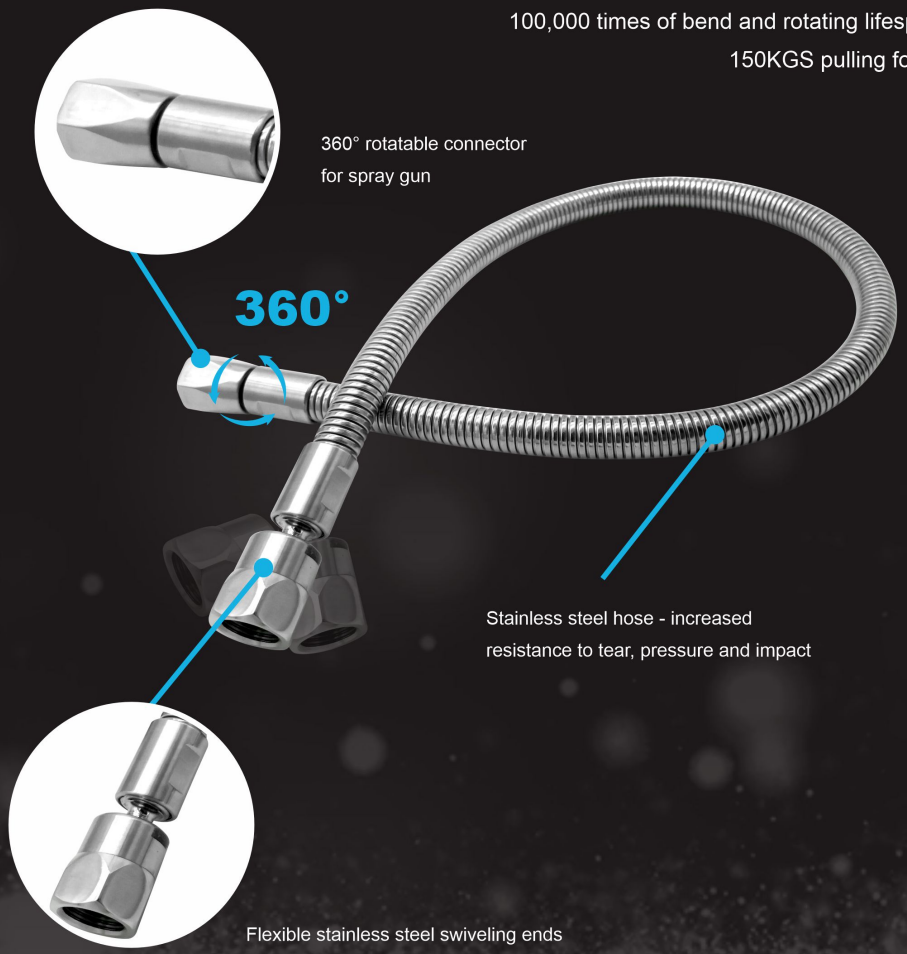

WHY BESTWARE STAINLESS STEEL?

Stainless steel is 100% recyclable and is comprised of over 60% recycled material

Superior durability and high hygiene with grade 304 stainless steel

Bestware faucets are the perfect solution in the commercial and industry for better water quality and the circumvention of the development of deleterious substances and bacteria.No plating, no oxidizing,no rust,lead free.

Advanced technology for easy maintenance

Superb brushed surface finish to highlight the stylish metal texture and cleanliness

Friendly operation with high-wear Stainless Steel Rapid Screw Valve

T-shaped valve to avoid backflow and cross contamination

Approximately 5 min/set by own installation

Easy lock nut and bushing for exceptionally fast and simple top mount installation.

DIFFERENCE FROM OTHER BRANDS



Tap Body

One-piece construction for stainless steel casting, weld-free with improved hygiene



Patented Spray Valve

SS304 construction with premium flow control
One-hand operating to jet or shower performance



Hook / Wall bracket

Shock-resistance parts are manufacturered by solid stainless steel



Seamless Riser

Intensive 2.5mm-thick seamless SS tube, reinforced fixing to prevent water leakage.

PROFESSIONAL

CONTEMPORARY STYLE

With extensive range of components, we can offer a large selection of both standard and custom stainless steel units as well as flexible combination.



PROFESSIONAL COMMERCIAL PRE RINSE

Bestware professional engineering processes are implemented to every detail that providing friendly operation and high performance along with safety and durability.

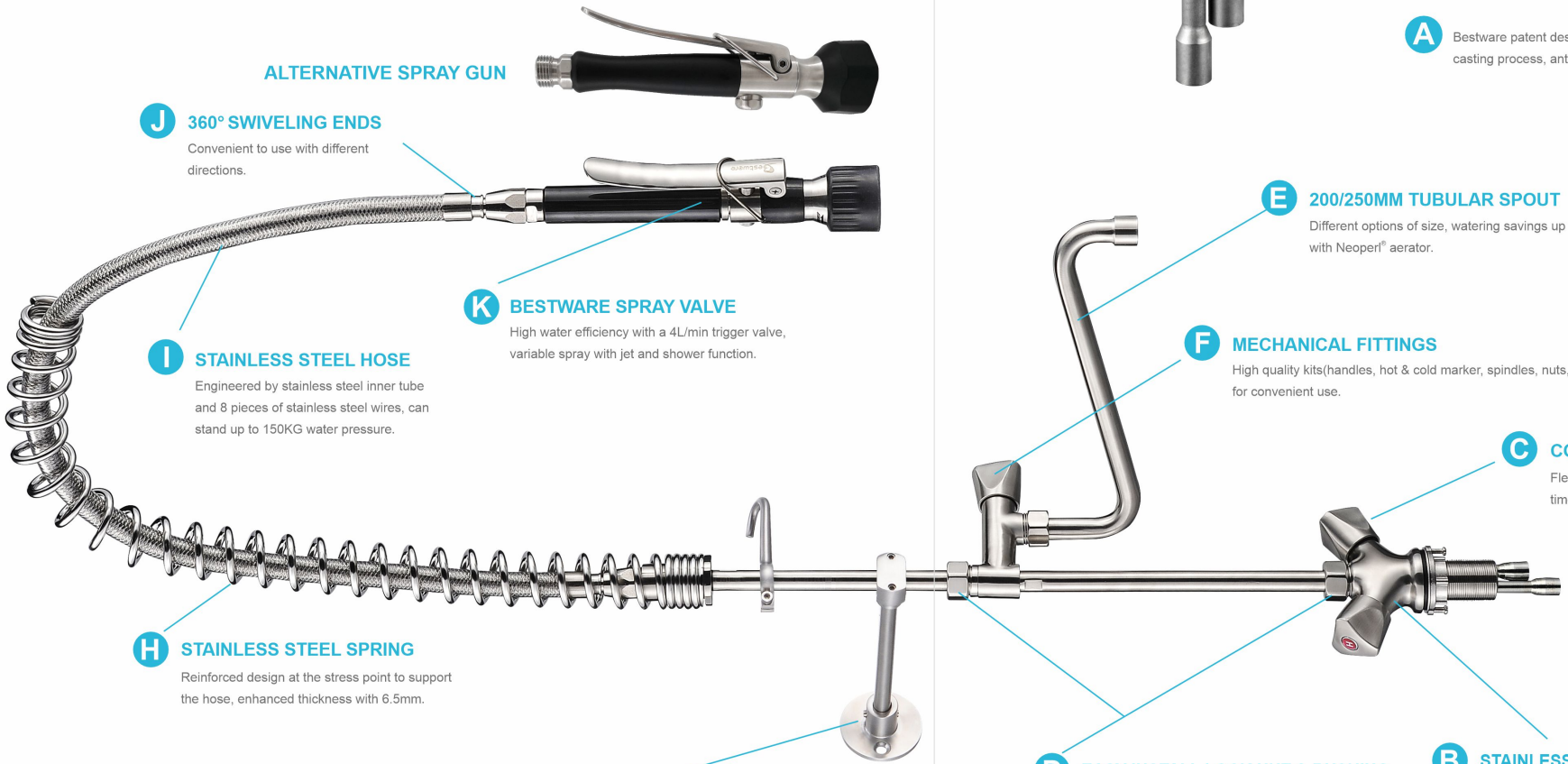

ALTERNATIVE SPRAY GUN

J 360° SWIVELING ENDS
Convenient to use with different directions.

K BESTWARE SPRAY VALVE
High water efficiency with a 4L/min trigger valve, variable spray with jet and shower function.

I STAINLESS STEEL HOSE
Engineered by stainless steel inner tube and 8 pieces of stainless steel wires, can stand up to 150KG water pressure.

H STAINLESS STEEL SPRING
Reinforced design at the stress point to support the hose, enhanced thickness with 6.5mm.

G STAINLESS STEEL WALL BRACKET
2" (51mm), 6" (152mm), 12" (305mm) are available, could be adjusted as per requirement.



A
Bestware patent design tooling, over 72 hours multiple casting process, anti-leaking.

E 200/250MM TUBULAR SPOUT
Different options of size, watering savings up to 30% with Neoperl® aerator.

F MECHANICAL FITTINGS
High quality kits(handles, hot & cold marker, spindles, nuts, washers) for convenient use.

C CONVENTIONAL BRASS HEADWORK
Flexibly control water flow, can stand 300,000 times turning.

D EASY INSTALL LOCK NUT & BUSHING
Built-in water sealing washer, hard tighten easy installation.

B STAINLESS STEEL CNC CASTING
100% stainless steel in contact with water food grade, corrosion resistance, exceptional durability.



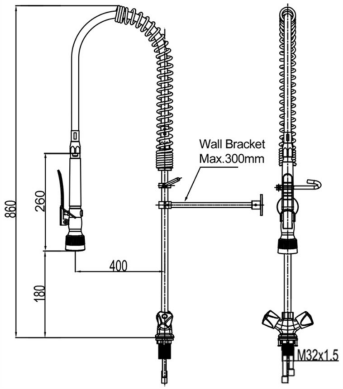

EF100

FRANKIE Deck Mount Pre Rinse Faucet

Material: S/S 304



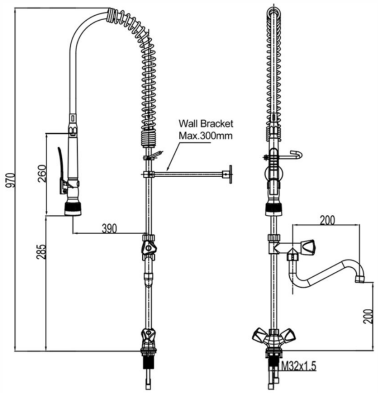

EF200

FRANKIE Deck Mount Pre Rinse Faucet
with 200mm S-Spout

Material: S/S 304



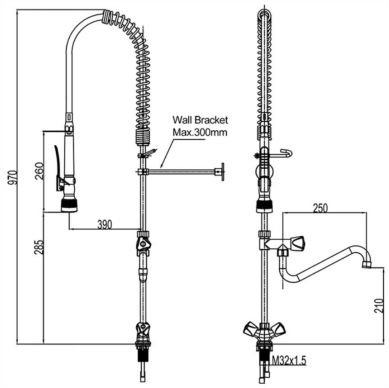

EF250

FRANKIE Deck Mount Pre Rinse Faucet
with 250mm S-Spout

Material: S/S 304



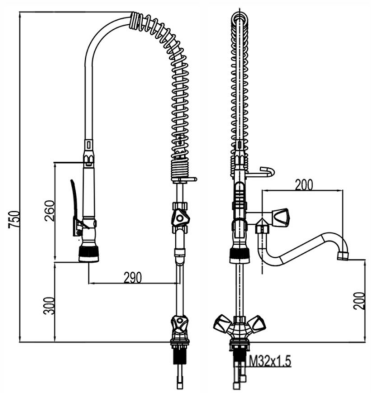

EF200C

FRANKIE Deck Mount Café Pre Rinse Faucet
with 200mm S-Spout

Material: S/S 304



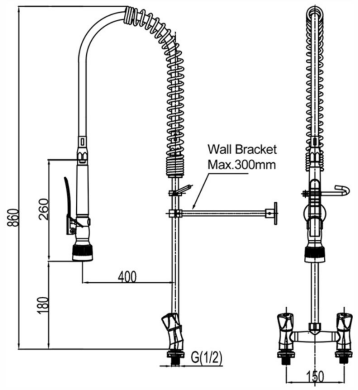

EH100

Dual Deck Mount Pre Rinse Faucet

Material：S/S 304



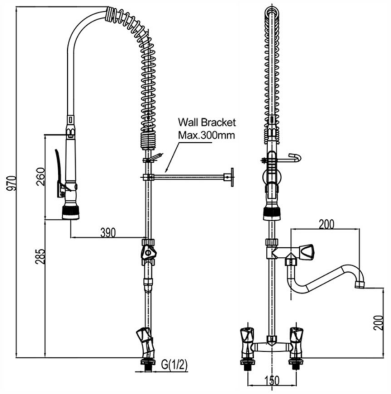

EH200

Dual Deck Mount Pre Rinse Faucet
with 200mm S-Spout

Material：S/S 304



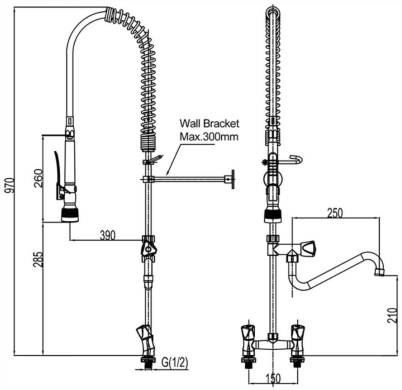

EH250

Dual Deck Mount Pre Rinse Faucet
with 250mm S-Spout

Material：S/S 304



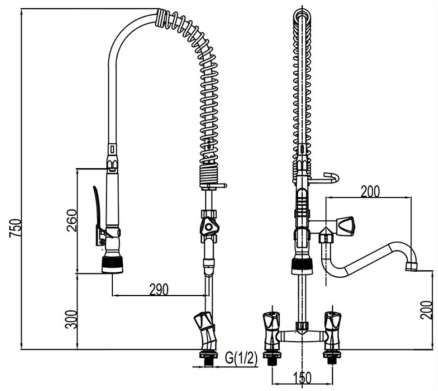

EH200C

Dual Deck Mount Café Pre Rinse Faucet
with 200mm S-Spout

Material：S/S 304



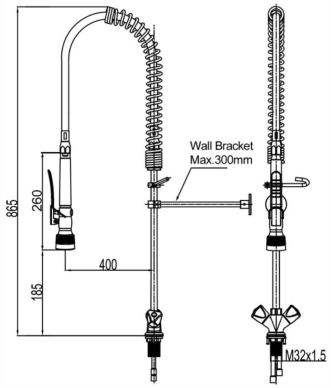

ED100

DIAMOND Deck Mount Pre Rinse Faucet

Material：S/S 304



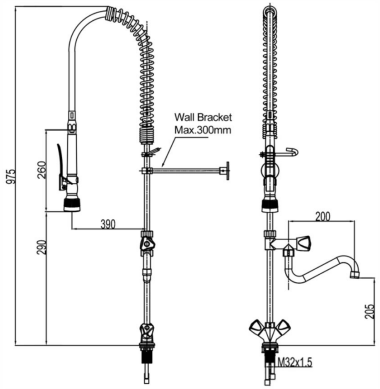

ED200

DIAMOND Deck Mount Pre Rinse Faucet

with 200mm S-Spout

Material：S/S 304



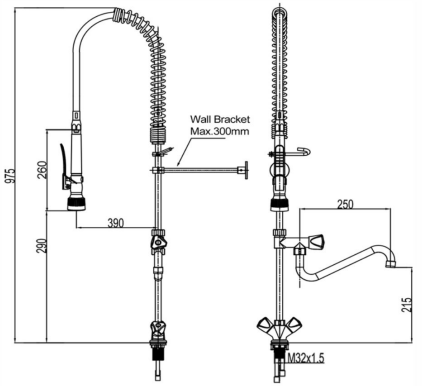

ED250

DIAMOND Deck Mount Pre Rinse Faucet

with 250mm S-Spout

Material：S/S 304



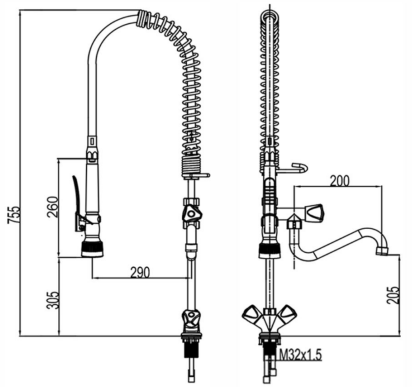

ED200C

DIAMOND Deck Mount Café Pre Rinse Faucet

with 200mm S-Spout

Material：S/S 304



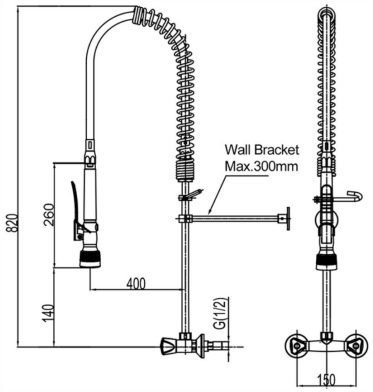

EW100

150mm Wall Mount Pre Rinse Faucet

Material：S/S 304



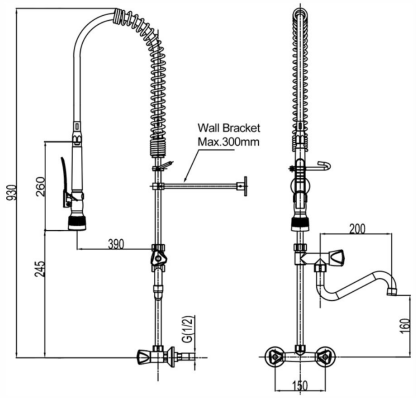

EW200

150mm Wall Mount Pre Rinse Faucet

with 200mm S-Spout

Material：S/S 304



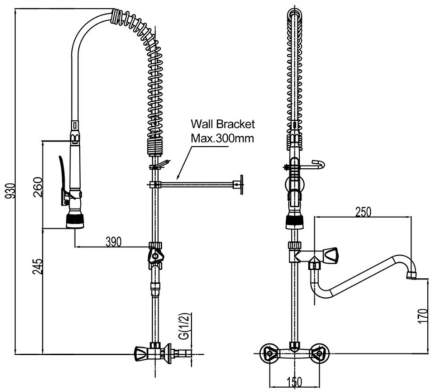

EW250

150mm Wall Mount Pre Rinse Faucet

with 250mm S-Spout

Material：S/S 304



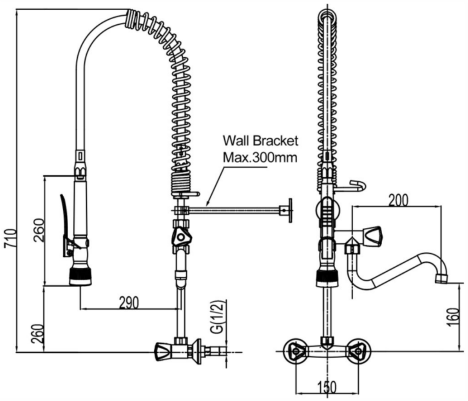

EW200C

150mm Wall Mount Café Pre Rinse Faucet

with 200mm S-Spout

Material：S/S 304



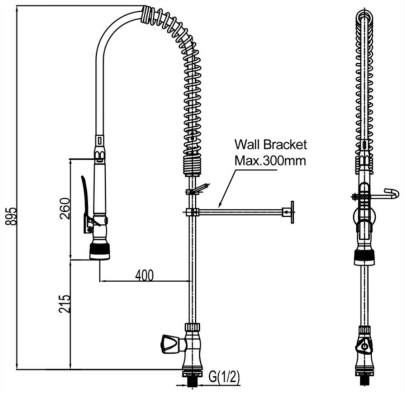

ES100

Single Deck Mount Pre Rinse Faucet

Material: S/S 304



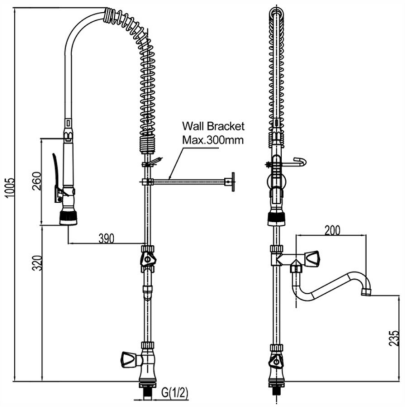

ES200

Single Deck Mount Pre Rinse Faucet

with 200mm S-Spout

Material: S/S 304



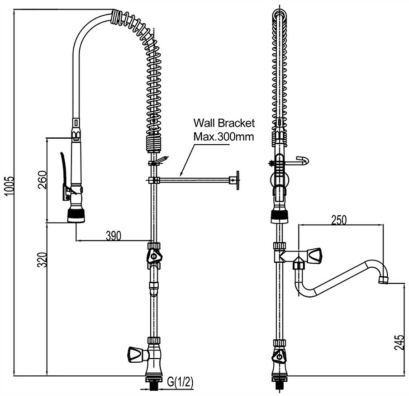

ES250

Single Deck Mount Pre Rinse Faucet

with 250mm S-Spout

Material: S/S 304



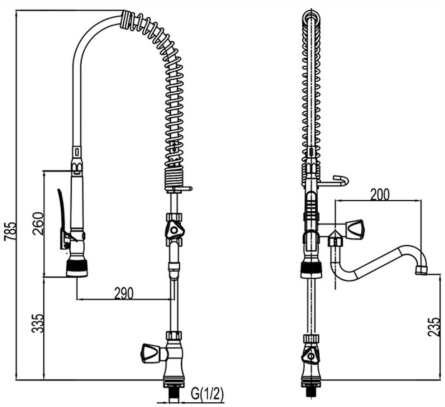

ES200C

Single Deck Mount Café Pre Rinse Faucet

with 200mm S-Spout

Material: S/S 304

PREMIUM

TYPICAL STYLE

Bestware brings the fine design and
high technology together
in all areas of the product process
beyond traditional kitchen faucet.



PREMIUM COMMERCIAL PRE RINSE

With luxury design and top craftsmanship, Bestware persevered with our effort for producing stainless steel taps to ever-improving standards of quality and artistry.





A Unique design by Bestware
finest machining processes for ensuring clear lines and smooth operation.

ALTERNATIVE SPRAY GUN



J 360° SWIVELING ENDS
Convenient to use with different directions.

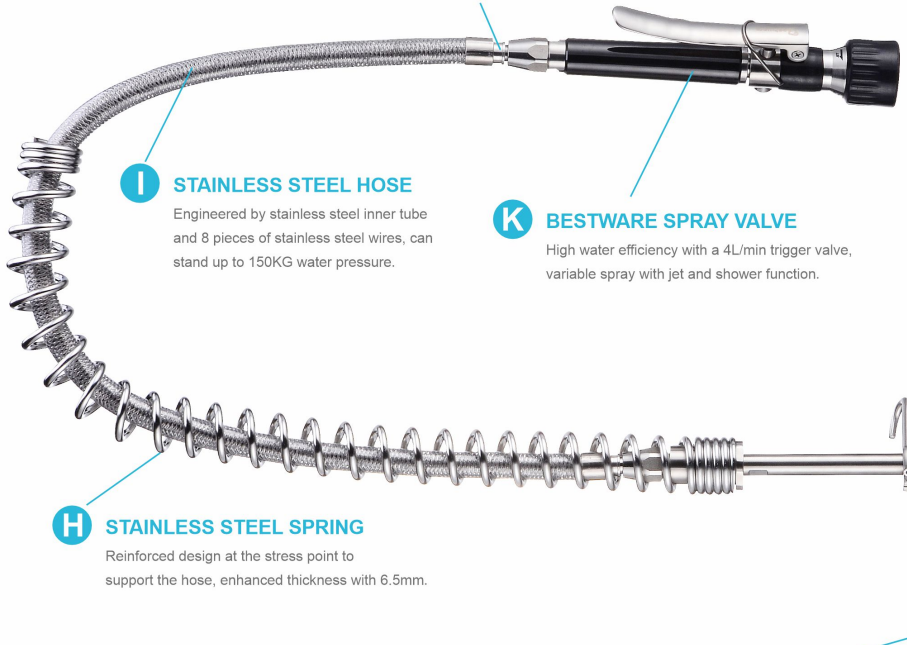

I STAINLESS STEEL HOSE
Engineered by stainless steel inner tube and 8 pieces of stainless steel wires, can stand up to 150KG water pressure.

K BESTWARE SPRAY VALVE
High water efficiency with a 4L/min trigger valve, variable spray with jet and shower function.

E 6" /12" SWIVELING SPOUT
STRETCHABLE DOUBLE JOINT POT FILLER
Different options of size, watering savings up to 30% with Neoperl® aerator.



F MECHANICAL FITTINGS
High quality kits(handles, hot&cold marker, spindles, nuts, washers)for convenient use.

C STAINLESS STEEL CARTRIDGE
Rapid screw valve core, fast and convenient to turn on or off, lasting use without leaking.

H STAINLESS STEEL SPRING
Reinforced design at the stress point to support the hose, enhanced thickness with 6.5mm.

G STAINLESS STEEL WALL BRACKET
2" (51mm),6" (152mm), 12" (305mm) are available, could be adjusted as per requirement.

D EASY INSTALL LOCK NUT&BUSHING
Built-in water sealing washer, hard tighten easy installation.

B PURE STAINLESS STEEL MATERIAL
NATURAL CHOICE
Food grade, corrosion resistance, exceptional durability.



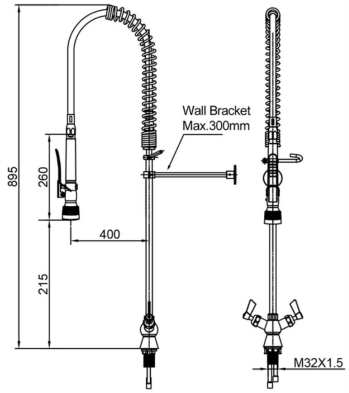

AA100

DANCING ANGEL Deck Mount Pre Rinse Faucet

Material: S/S 304



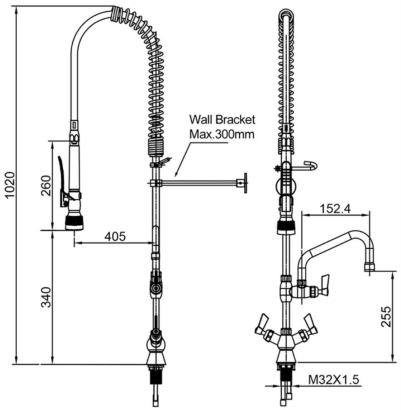

AA106

DANCING ANGEL Deck Mount Pre Rinse Faucet

with 6" Pot Filler

Material: S/S 304



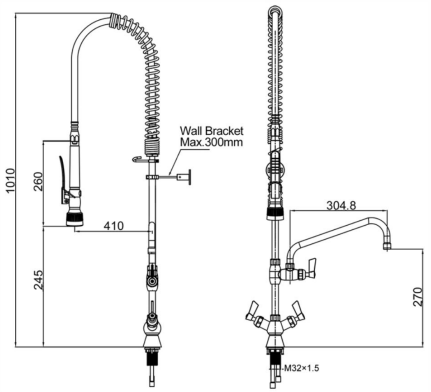

AA112

DANCING ANGEL Deck Mount Pre Rinse Faucet

with 12" Pot Filler

Material: S/S 304



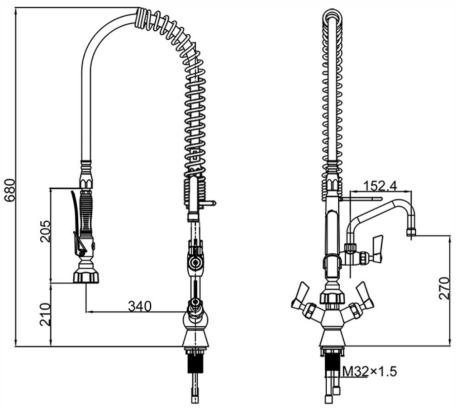

AA106C

DANCING ANGEL Deck Mount Café Pre Rinse Faucet

with 6" Pot Filler

Material: S/S 304



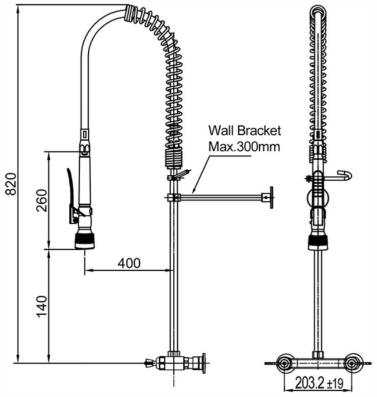

AW800

8" Wall Mount Pre Rinse Faucet

Material: S/S 304



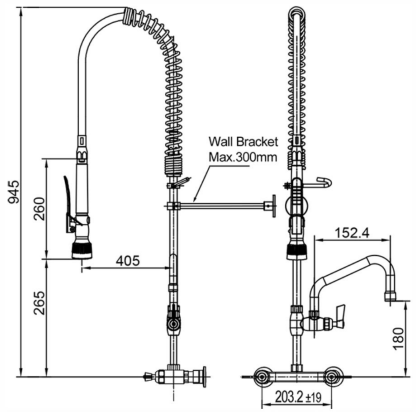

AW806

8" Wall Mount Pre Rinse Faucet
with 12" Pot Filler

Material: S/S 304



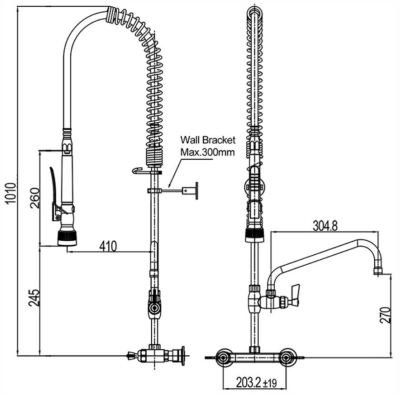

AW812

8" Wall Mount Pre Rinse Faucet
with 12" Pot Filler

Material: S/S 304



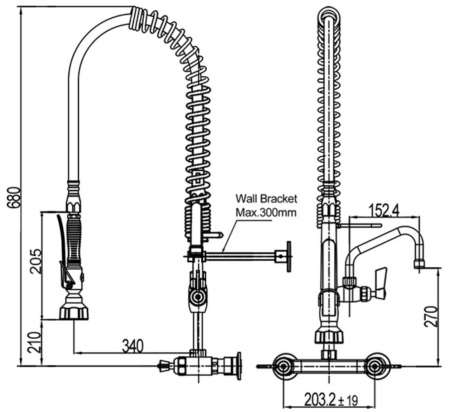

AW806C

8" Wall Mount Café Pre Rinse Faucet
with 6" Pot Filler

Material: S/S 304



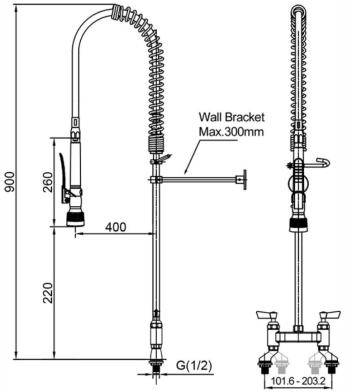

AD100

4" /8" Deck Mount Pre Rinse Faucet

Material：S/S 304



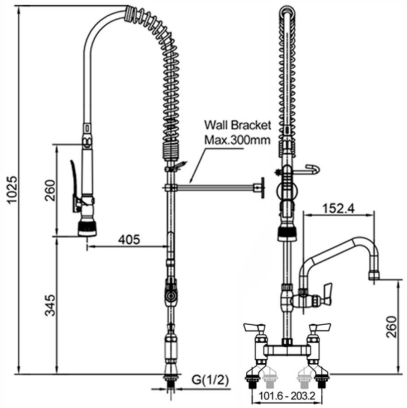

AD106

4" /8" Deck MountPre Rinse Faucet

with 6" Pot Filler

Material：S/S 304



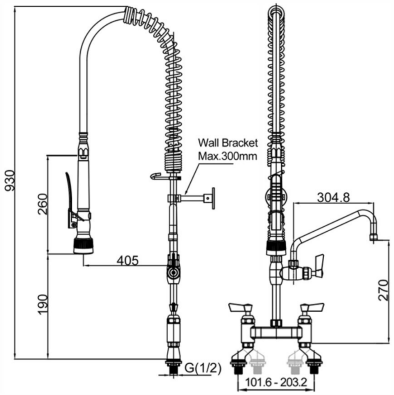

AD112

4" /8" Deck Mount Pre Rinse Faucet

with 12" Pot Filler

Material：S/S 304



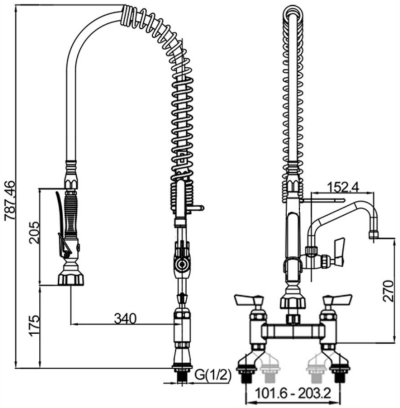

AD106C

4" /8" Deck Mount Café Pre Rinse Faucet

with 6" Pot Filler

Material：S/S 304



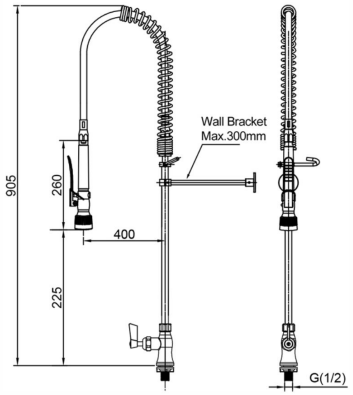

AS100

Single Deck Mount Pre Rinse Faucet

Material: S/S 304



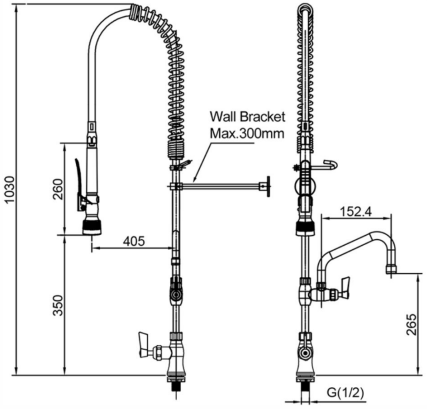

AS106

Single Deck Mount Pre Rinse Faucet
with 6" Pot Filler

Material: S/S 304



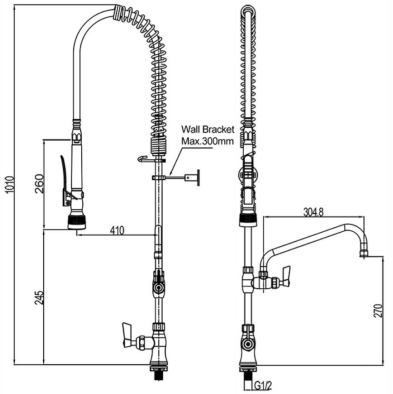

AS112

Single Deck Mount Pre Rinse Faucet
with 12" Pot Filler

Material: S/S 304



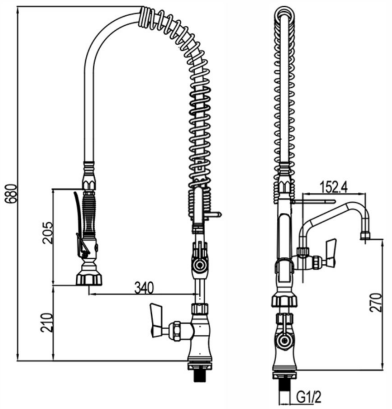

AS106C

Single Deck Mount Café Pre Rinse Faucet
with 6" Pot Filler

Material: S/S 304

ECONOMY

AFFORDABLE STYLE

A new collection of low-budget,
state-of-the-art and user-friendly tapware,
to give customers more project solutions.





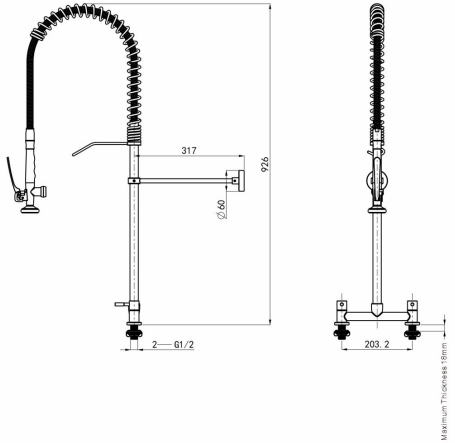

ECD100

DAISY Dual Deck Mount Pre Rinse Faucet

Material: S/S 304



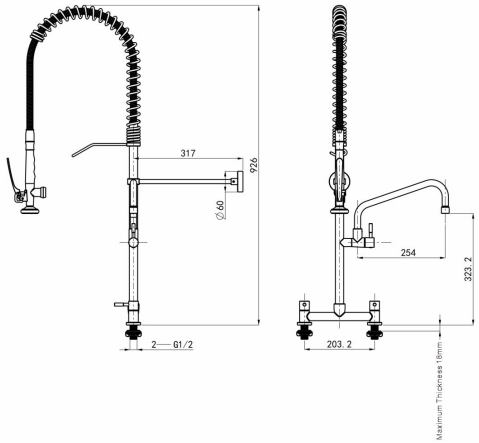

ECD110

DAISY Dual Deck Mount Pre Rinse Faucet with 10" Pot Filler

Material: S/S 304



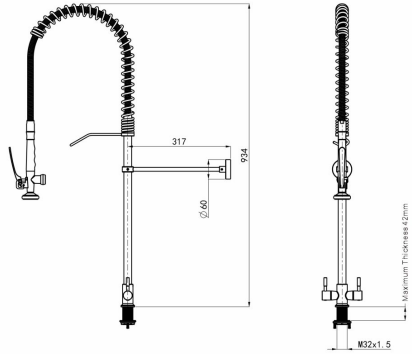

ECH100

DAISY Single Deck Mount Pre Rinse Faucet

Material: S/S 304



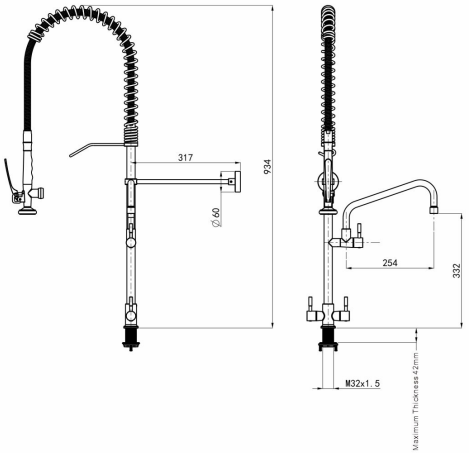

ECH110

DAISY Single Deck Mount Pre Rinse Faucet with 10" Pot Filler

Material: S/S 304



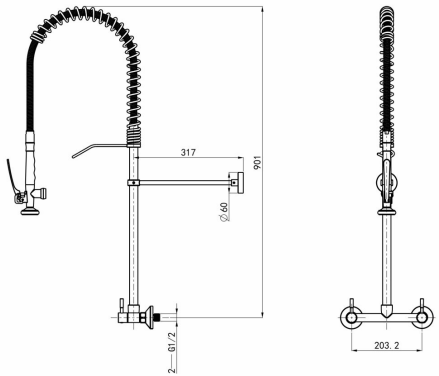

ECW100

DAISY Wall Mount Pre Rinse Faucet

Material: S/S 304



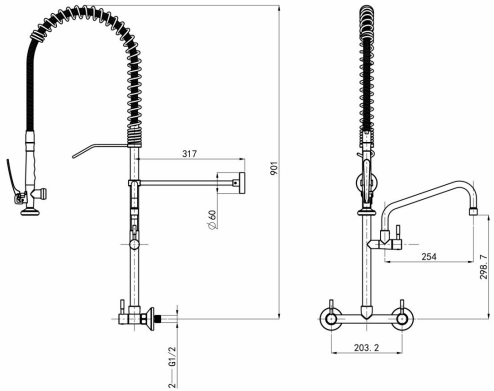

ECW110

DAISY Wall Mount Pre Rinse Faucet with 10" Pot Filler

Material: S/S 304





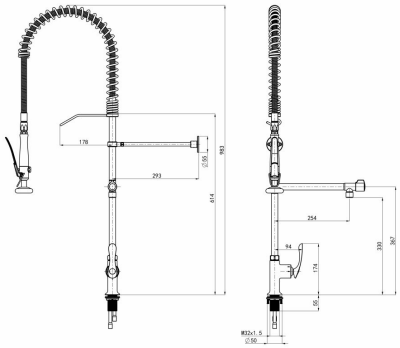

BH110

Single Deck Mount Pre Rinse Faucet

Material: S/S 304



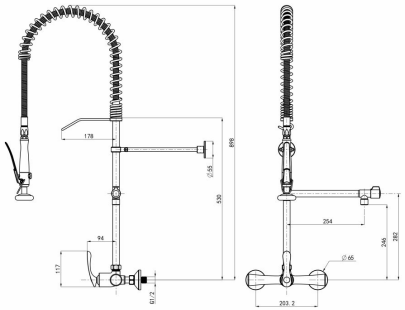

BW110

Wall Mount Pre Rinse Faucet with 10" Pot Filler

Material: S/S 304





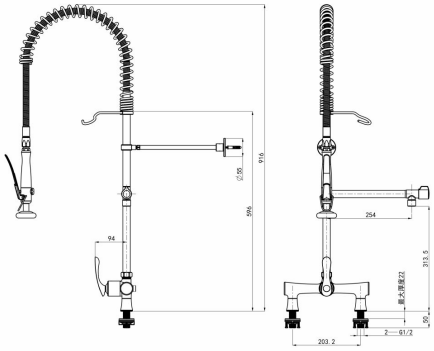

BD110

Deck Mount Pre Rinse Faucet

Material: S/S 304

STAINLESS STEEL

SINK FAUCET

Choose from our sink faucets of different sizes, styles, and types to find a model that’s compatible with your handwashing, warewashing, or general cleaning needs.





AA112S

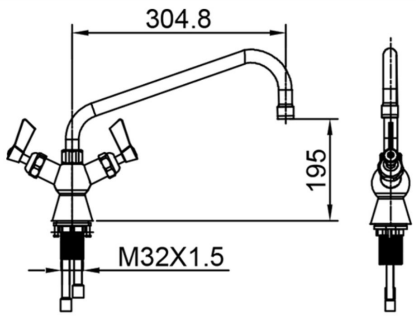



AW812S

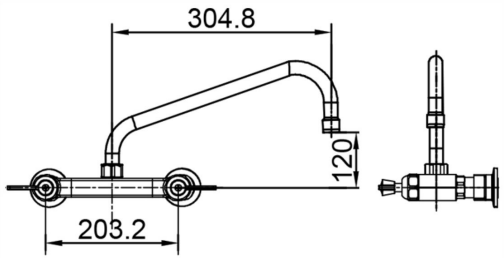



AD112S

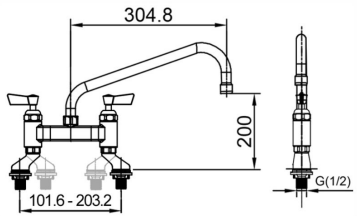

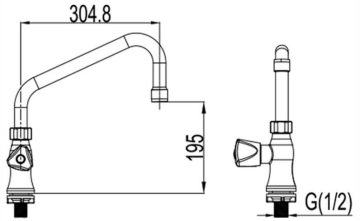



ES112S



ED112S

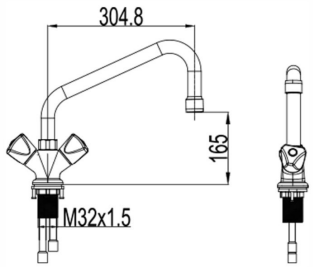



EF112S

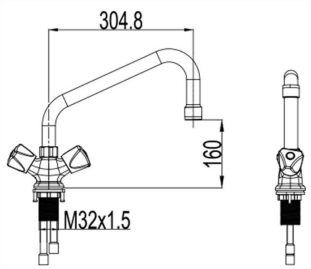

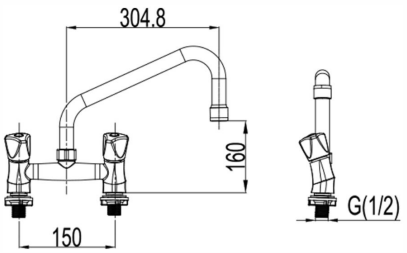

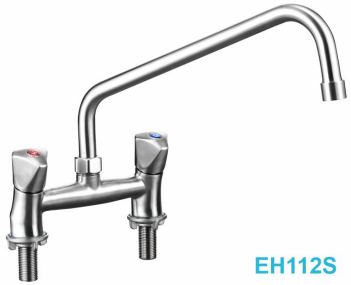

EH112S



EW112S

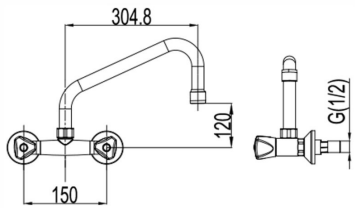



ECD110S

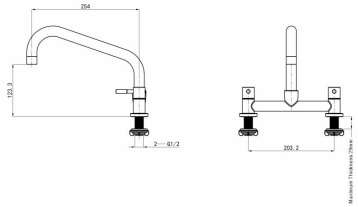

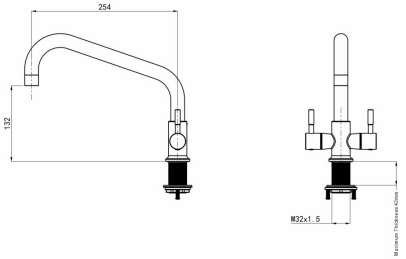



ECH110S



ECW110S

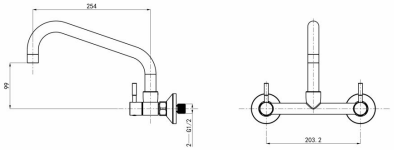

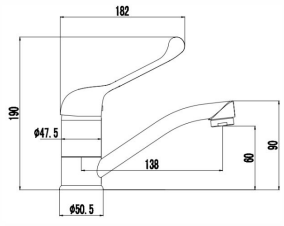



BWLBMIX



BWLSMIX

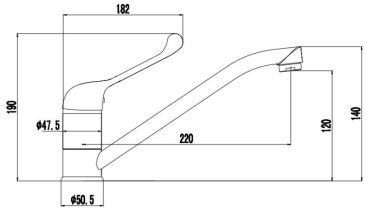

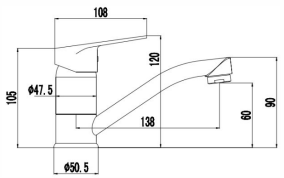



BWBMIX



BWSMIX

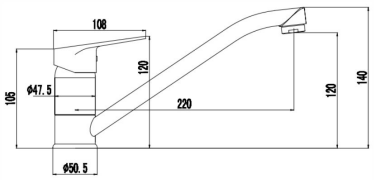

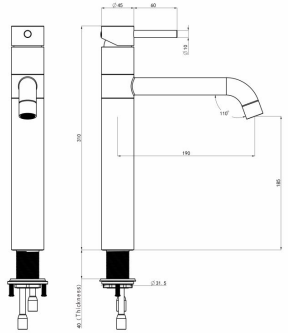



BTLT190 / BTLT250 / BTLT300



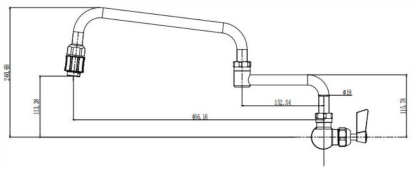

DJPF-SW

Single W/M Dual Joint Pot Filler
with Insulated On-Off Control
Material: Stainless Steel 304 Tap Body and Spouts
Silicone On-Off Outlet

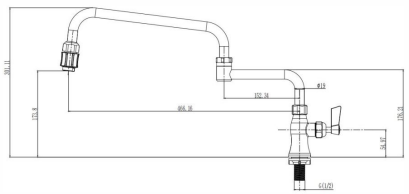



DJPF-SD

Single D/M Dual Joint Pot Filler
with Insulated On-Off Control
Material: Stainless Steel 304 Tap
Body and Spouts
Silicone On-Off Outlet

FRYER BASKETS

Ideal for Food Service, Commercial Kitchen, Hotel Application, Canteen, Bar, Café, Restaurant and any area that catering equipment accessories are required.











BTW50145

Materials: • Iron Wire with Copper & Nickel Plated
• Stainless Steel
Specification: 336×165×152mm



BTW501002

Materials: • Iron Wire with Copper & Nickel Plated
• Stainless Steel
Specification: 308×160×135mm



BTW50320

Materials: • Iron Wire with Copper & Nickel Plated
• Stainless Steel
Specification: 320×150×136mm



BTW50124P

Materials: • Iron Wire with Copper & Nickel Plated
• Stainless Steel
Specification: 310×160×100mm



BTW50K2

Materials: • Iron Wire with Copper & Nickel Plated
• Stainless Steel
Specification: 200×200×140mm



BTW50K1

Materials: • Iron Wire with Copper & Nickel Plated
• Stainless Steel
Specification: 330×150×140mm

BTW50147

Materials: • Iron Wire with Copper & Nickel Plated
• Stainless Steel
Specification: 336×114×152mm



BTWKP245

Materials: • Iron Wire with Copper & Nickel Plated
• Stainless Steel
Specification: 245×195×145mm





BTW5057P

Materials: • Iron Wire with Copper & Nickel Plated
• Stainless Steel
Specification: 310×200×100mm

BTW501005

Materials: • Iron Wire with Copper & Nickel Plated
• Stainless Steel
Specification: 336×143×143mm

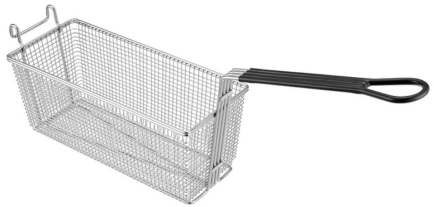



BTW502533

Materials: • Iron Wire with Copper & Nickel Plated
• Stainless Steel
Specification: 336×165×146mm

BTW5026

Materials: • Iron Wire with Copper & Nickel Plated
• Stainless Steel
Specification: 336×222×145mm





BTW5033001

Materials: • Iron Wire with Copper & Nickel Plated
• Stainless Steel
Specification: 433×210×152mm

BTW50255-RT

Materials: • Iron Wire with Copper & Nickel Plated
• Stainless Steel
Specification: 255×202×140mm





BTW50F-4

Materials: • Iron Wire with Copper & Nickel Plated
• Stainless Steel
Specification: 336×165×125mm

BTW50F-R

Materials: • Iron Wire with Copper & Nickel Plated
• Stainless Steel
Specification: 380×215×135mm





BTW60400

Materials:
- Iron Wire with Copper & Nickel Plated
- Stainless Steel

Specification: 285×117×95mm



BTW60400D

Materials:
- Iron Wire with Copper & Nickel Plated
- Stainless Steel

Specification: 285×225×120mm



BTW60401

Materials:
- Iron Wire with Copper & Nickel Plated
- Stainless Steel

Specification: 320×200×140mm



BTW60180

Materials:
- Iron Wire with Copper & Nickel Plated
- Stainless Steel

Specification: 360×225×120mm

BTW60810

Materials:
- Iron Wire with Copper & Nickel Plated
- Stainless Steel

Specification: 360×160×120mm





BTW50A4492

Materials:
- Iron Wire with Copper & Nickel Plated
- Stainless Steel

Specification: 355.6×315×165mm



BTW50203

Materials: Stainless Steel

Specification: Φ240×H180mm



BTW50000

Materials: Stainless Steel
Specification: 335×265×255mm

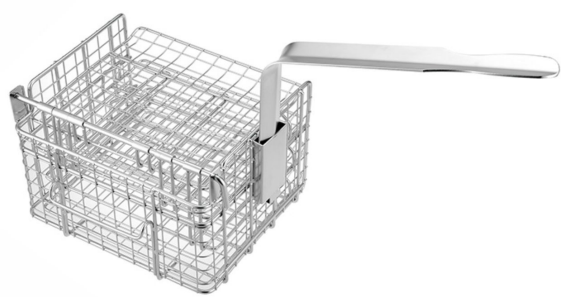

BTW50001

Materials: Stainless Steel
Specification: 335×343×215mm



BTW50002

Materials: Stainless Steel
Specification: 335×310×215mm



TB-4

Materials: Iron Wire with Copper & Nickel Plated;
S/S 201 Sheet
Specification: 163×165×80mm



TB-6

Materials: Iron Wire with Copper & Nickel Plated;
S/S 201 Sheet
Specification: 235×165×80mm



TB-8

Materials: Iron Wire with Copper & Nickel Plated;
S/S 201 Sheet
Specification: 310×165×80mm



TB-18

Materials: Iron Wire with Copper & Nickel Plated;
S/S 201 Sheet
Specification: 235×160×76mm

PASTA BASKETS

Perfect for your restaurant, cafeteria,
or other commercial kitchen.
Bestware Pasta Baskets will make cooking
your pasta dishes effortless!







BTW60S57/BTW60S59/ BTW60S67/BTW60S69

Material: Stainless Steel 304
0.8mm Thickness, Φ2mm Hole
Specification: Φ5"×7"/ Φ5"×9"/ Φ6.5"×7"/ Φ6.5"×9"

BTW60U111/BTW60U118/BTW60U228/ BTW60D444/BTW60D448/BTW60D338/ BTW60S555/BTW60S558/BTW60S668

Material: Stainless Steel 304
0.8mm Thickness, Φ2mm Hole
Specification: 145×145×145mm
145×145×180mm
165×125×180mm





BTW60S844/BTW60S848

Material: Stainless Steel 304
0.8mm Thickness, Φ2mm Hole
Specification: 280×145×145mm
280×145×180mm

BTW6057/BTW6059/ BTW6067/BTW6069

Material: Stainless Steel 304
Specification: Φ5"×7"/ Φ5"×9"/ Φ6.5"×7"/ Φ6.5"×9"





BTW501313

Material: Stainless Steel 304
Specification: 322×313×230mm

WIRE RACKS

Bestware produces different types
of racks for refrigerators,
ovens, bakery, display cases and more.
Welcome your drawings and further details
for OEM/ODM!





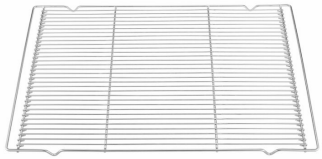

BTW70153

Materials: • Iron Wire with Copper & Nickel Plated
• Stainless Steel
Specification: 630×416×20mm

BTW70154

Materials: • Iron Wire with Copper & Nickel Plated
• Stainless Steel
Specification: 417×308×29mm

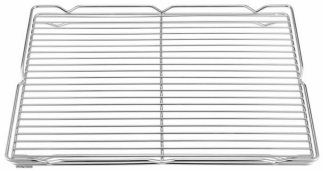



BTW1508220

Materials: • Iron Wire with Copper & Nickel Plated
• Stainless Steel
Specification: 600×400mm

BTW15082300

Materials: • Iron Wire with Copper & Nickel Plated
• Stainless Steel
Specification: 431.8×431.8mm

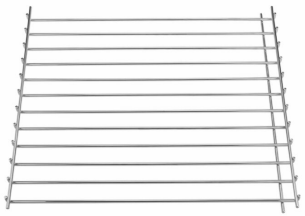

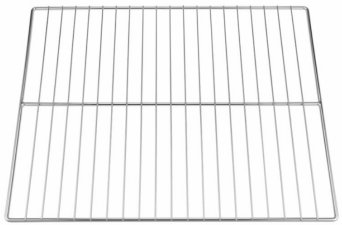

BTW70001PR

Materials: • Iron Wire with Copper & Nickel Plated
• Stainless Steel
Specification: 656×585mm

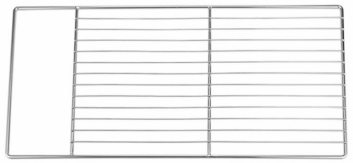

BTW70002PR

Materials: • Iron Wire with Copper & Nickel Plated
• Stainless Steel
Specification: 408×732mm

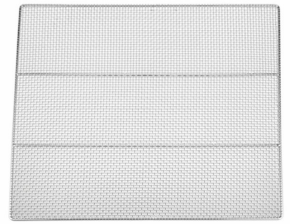

BTW70051

Materials: • Iron Wire with Copper & Nickel Plated
• Stainless Steel
Specification: 585×585mm



BTW701169

Materials: • Iron Wire with Copper & Nickel Plated
• Stainless Steel
Specification: 724×417mm



BTW70580

Materials: Iron Wire with White Plastic Coating
Specification: 580×580mm

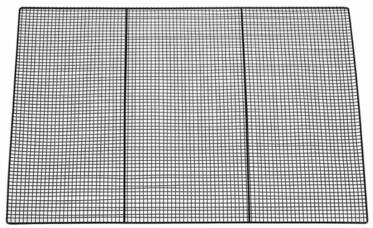

BTW70660

Materials: Iron Wire with Black Enamel Coating
Specification: 660×480mm

COMMERCIAL KITCHEN ACCESSORIES

Ideal for Food Service, Commercial Kitchen, Hotel Application, Canteen, Bar, Café, Restaurant and any area that catering equipment accessories are required.







X1

French Fry Scoop

Material: S/S 201 with Right-hand, PP Handle
0.7mm Thickness

Specification: 230×200×50mm



X2

French Fry Scoop

Material: S/S 201 with Left-hand, PP Handle
0.7mm Thickness

Specification: 230×200×50mm



X3

French Fry Scoop

Material: S/S 201 with Double-hand, PP Handle
0.7mm Thickness

Specification: 230×200×50mm

BTWCCS8/10/12

China Cap Strainer

Material: Stainless Steel 201

Specification: 8"/10"/12"





FW-10/12/14/16/18/20/22/24

Whisk

Material: Stainless Steel 201, Φ2.2mm×8 bar

Specification: 10"/12"/14"/16"/18"/20"/22"/24"



PW-10/12/14/16/18

Whisk

Material: Stainless Steel 201, Φ1.4mm×12 bar

Specification: 10"/12"/14"/16"/18”



PMC-18/24

Materials: Stainless Steel

Specification: Φ4.5"×18"
Φ6.0"×24"

PMS-24/30

Materials: Stainless Steel

Specification: 6"×6"×24”
6"×6"×30"



NOTE

NOTE



ENGINEERED FOR FUNCTIONALITY AND EFFICIENCY

As a leading manufacturer in stainless steel Pre Rinse, Bestware is expanding the sales network to global countries. We aim to achieve the most profitable outcomes by offering high-quality and advanced products to our customers and distributors.

Welcome to contact us for long term dealership at your local.

